11	12	13	14	15	16	17	18
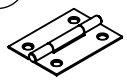 K1-15170	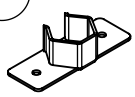 K1-15150	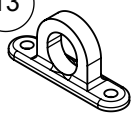 K1-15140	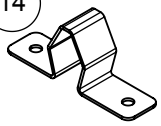 K1-15160	K1-10011	2 x K3-01006 *M4 x 30*	2 x K3-03044 *M4*	8 x K3-06002 *Ø4 x 25*

19
2 x K3-06011 *Ø4 x 12*

1

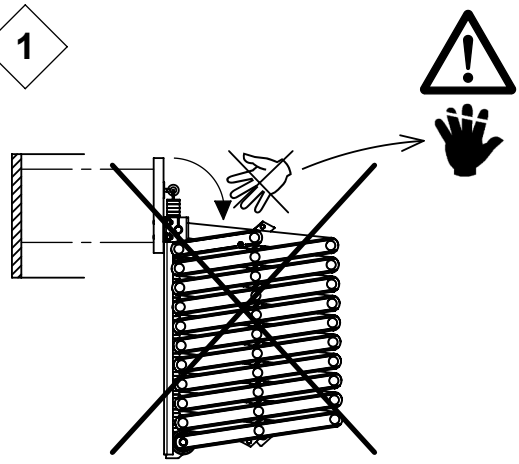

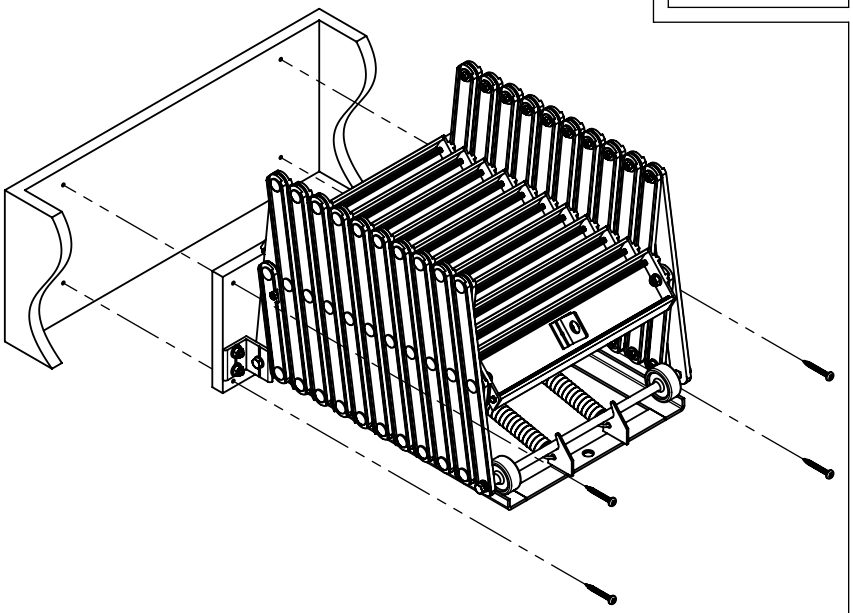

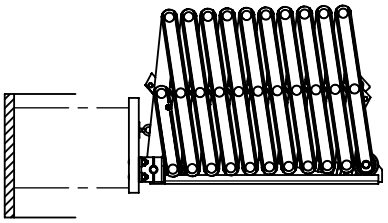

2

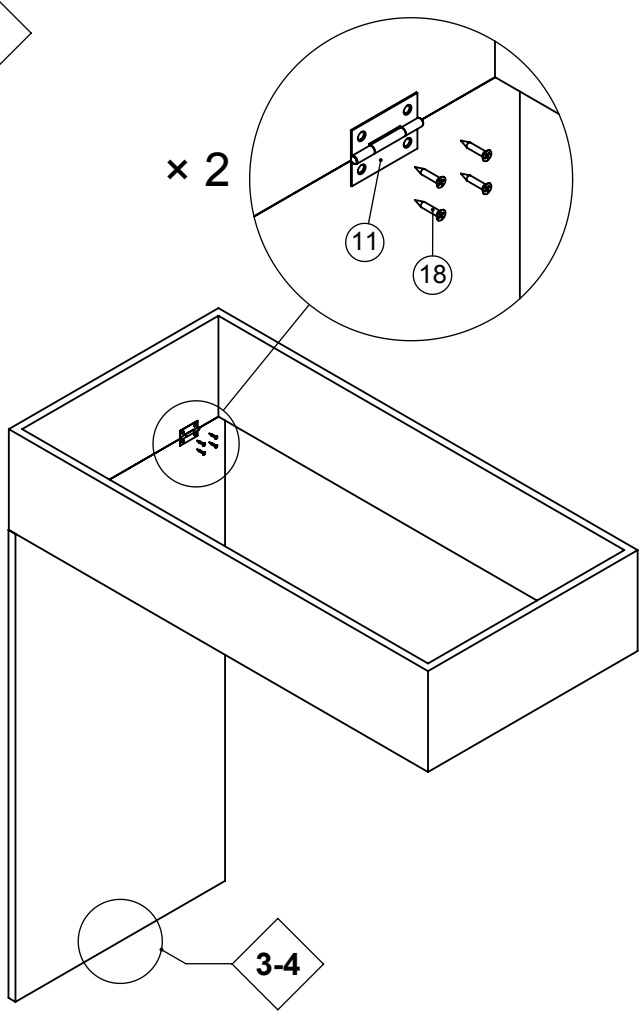

3

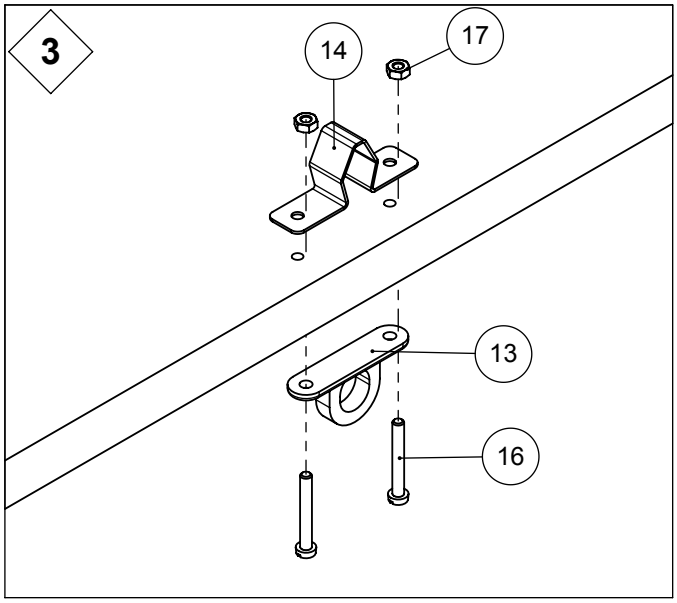

4

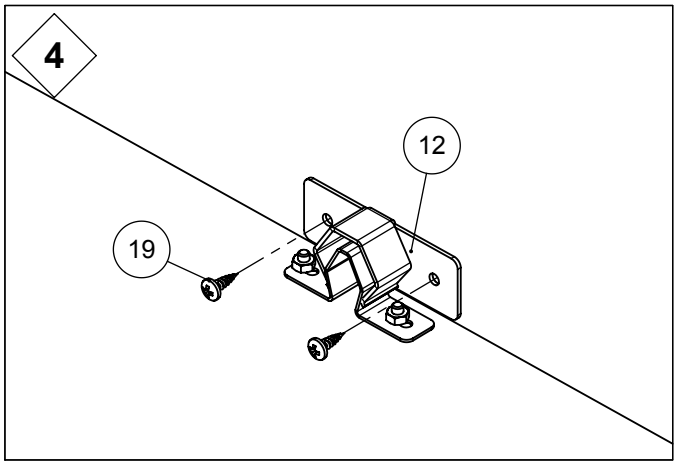

5

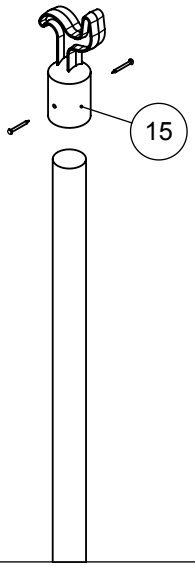
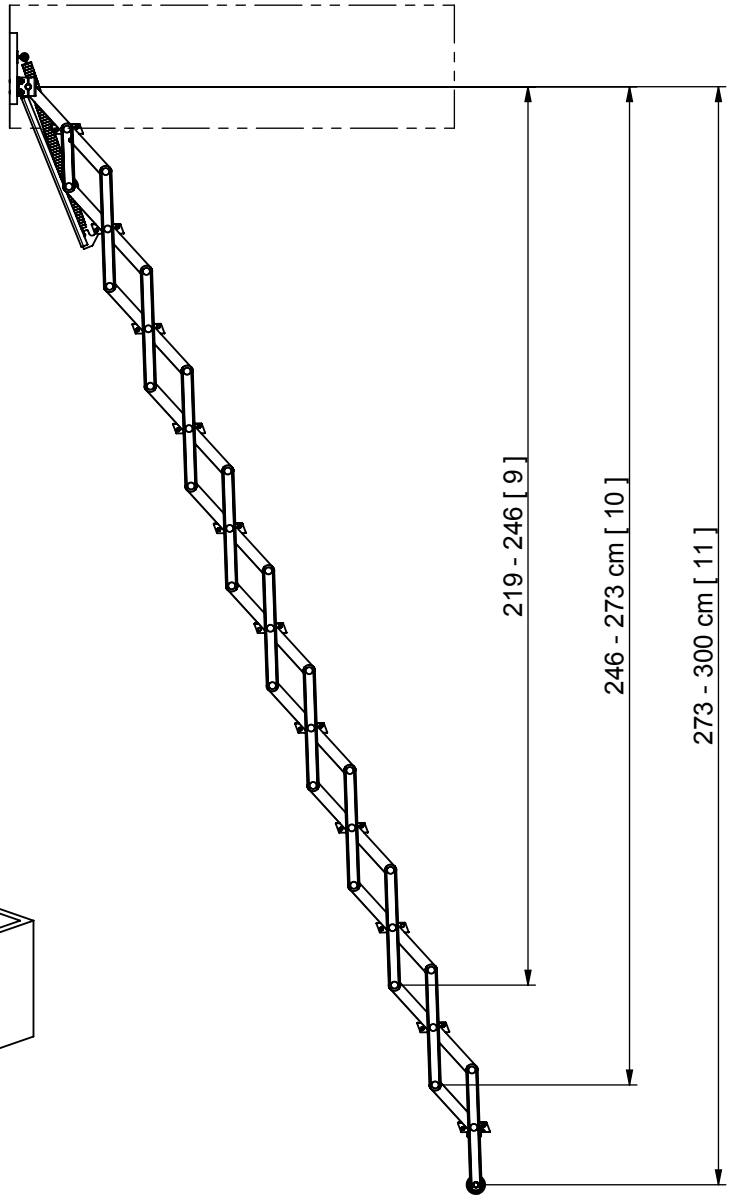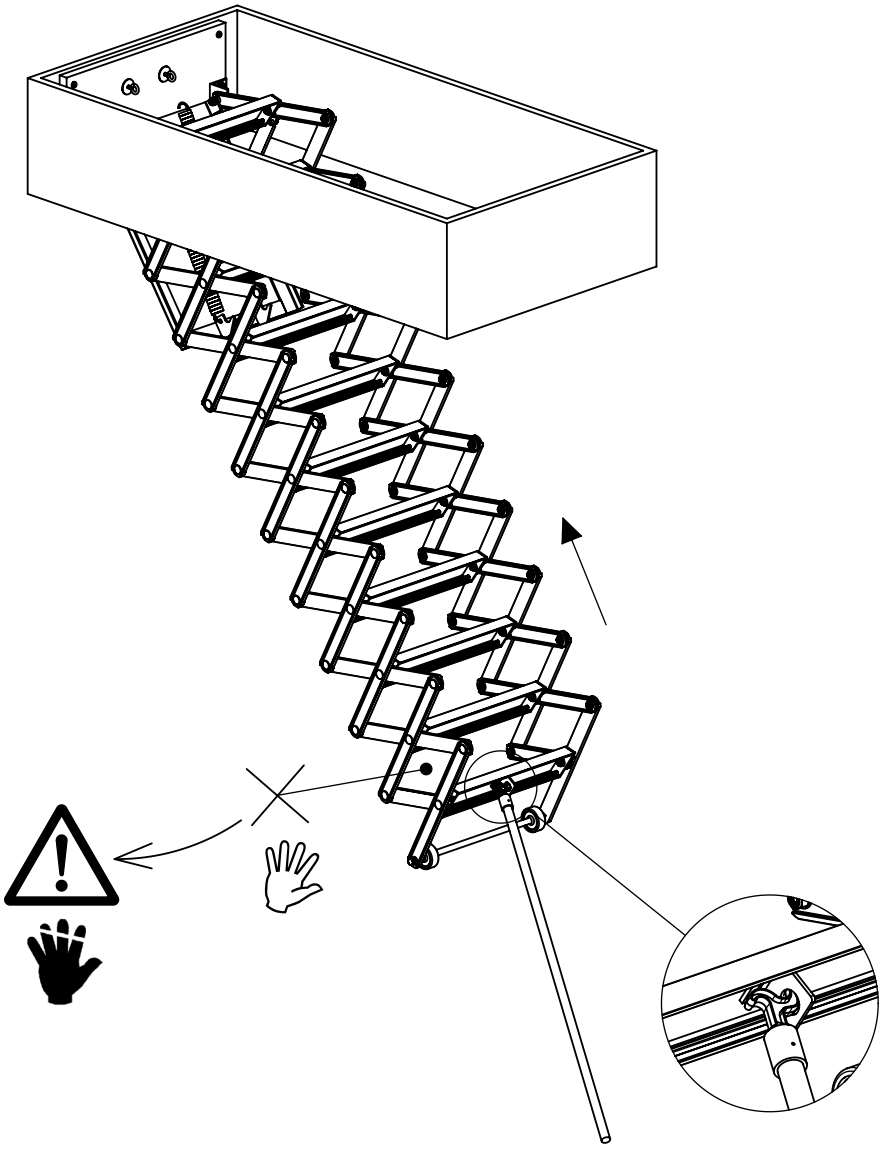
6